Ledtech Corporation (UK)
Candela House
Cardrew Ind. Est.
Redruth, Cornwall
TR15 1SS

T 01209 203198
F 01209 215197
sales@ledtech-uk.com

ledtech-uk.com

SPECIFICATION

LKA5071-11B-M1 / LKC5071-11B-M1
0.5" Single Alphanumeric Display SH Red

Ledtech Corporation (UK)
Candela House
Cardrew Ind. Est.
Redruth, Cornwall
TR15 1SS

T 01209 203198
F 01209 215197
sales@ledtech-uk.com

ledtech-uk.com

Description

0.5" Single Alphanumeric Display SH Red

Part No

LKA5071-11B-M1 (Common Anode)
LKC5071-11B-M1 (Common Cathode)

Dimensions

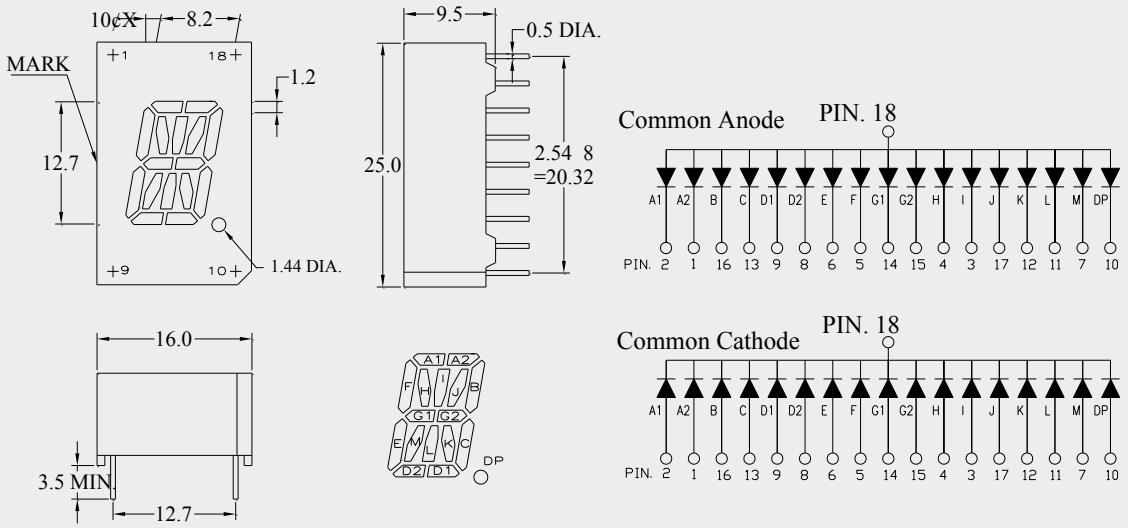

Description

Part No.	LED Chip		FACE COLOUR	
	Material	Emitting Colour	Surface	Segment
LKA5071-11B-M1 / LKC5071-11B-M1	AlGaAs/GaAs	SH Red	Grey	White

Notes
1. All dimensions are in mm.
2. Tolerance is ± 0.25mm unless otherwise noted.
3. Pin slope angle tolerance ±5.0°.

© 2017 Ledtech Corporation (UK). E&OE. Specifications subject to change without notice.

Ledtech Corporation (UK)
Candela House
Cardrew Ind. Est.
Redruth, Cornwall
TR15 1SS

T 01209 203198
F 01209 215197
sales@ledtech-uk.com

ledtech-uk.com

Description

0.5" Single Alphanumeric Display SH Red

Part No

LKA5071-11B-M1 (Common Anode)
LKC5071-11B-M1 (Common Cathode)

Absolute Maximum Ratings at Ta=25°C

Parameter	Symbol	Rating	Unit
Power Dissipation Per Segment	Pd	66	mW
Reverse Voltage Per Chip	Vr	4	V
D.C. Forward Current Per Chip	If	30	mA
Peak Current Per Segment (1/10 Duty Cycle, 0.1ms Pulse Width)	If (Peak)	100	mA
Operating Temperature Range	Topr.	-25 to +85	°C
Storage Temperature Range	Tstg.	-40 to +100	°C
Soldering Temperature (1.6mm from body)	Tsol.	Dip Soldering : 260°C for 5 sec. Hand Soldering : 350°C for 3 sec.	

Typical Electrical and Optical Characteristics:

Parameter	Symbol	Condition	Value	Unit
Luminous Intensity Per Segment	Iv	If=10mA /seg.	3.7	mcd
Forward Voltage Per Segment	Vf	If=20mA /seg.	1.8	V
Peak Wavelength	λp	If=20mA /seg.	660	nm
Dominant Wavelength	λp		643	
Reverse (Leakage) Current Per Segment	Ir	Vr=5V	100	µA
Response Time	T	-	250	ns

© 2017 Ledtech Corporation (UK). E&OE. Specifications subject to change without notice.